LEM-LWP / LEMS-LWP Plastic Clamp Levers with Flat Washers for Slotted Holes

SUS Stainless steel

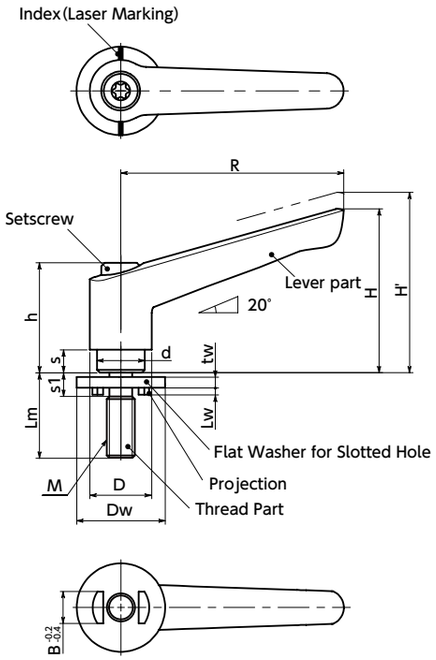

- Plastic clamp lever with flat washer for slotted holes.
- The projection on the washer seating surface prevents the washer from turning and the pointer on the top always points to the scale, making it suitable for a slide mechanism that uses slotted holes.

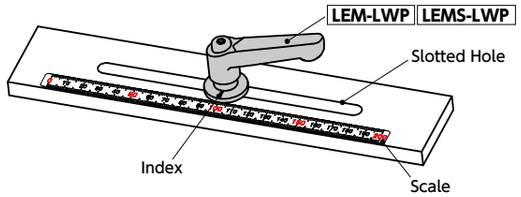

- Washers are built into the relief cut section to prevent them from falling off. This also eliminates the need to mount washers.
- The outside diameter of the washer is about 3 times the screw diameter. This provides a sufficient seating surface for the tightening area.
- The thread part is available in two materials.
  LEM-LWP ——— Steel
  LEMS-LWP ——— Stainless steel
- The zinc die cast serration ring is inserted into the plastic lever main unit. It achieves sufficient fitting strength with the metal screw serrations.
- The lever is available in 3 color variations. They can be selected by the end symbol of the part number.

End Symbol 3	Lever Part Color
BK	Matte Black
SG	Matte Silver
OR	Matte Orange

⚠ Precautions for Use

- Refer to the washer index as a guide.
- Before tightening the lever, make sure that the washers are located at the relief cut section as shown in **Fig. 1**. Tightening the washer while hooked on the screw thread as shown in **Fig. 2** may cause the washer to be deformed.

Fig. 1

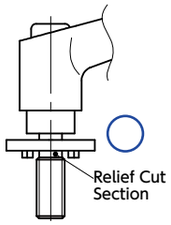

Fig. 2

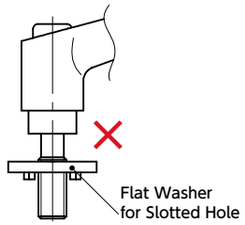

Related Products

Various scales such as stainless steel, polyester, vertical and horizontal types are available.

Through-hole type **SWAS-PPK** with the same shape as **LEM-LWP** with embedded washer for slotted holes is available.

Material/Finish

RoHS

	LEM-LWP	LEMS-LWP
Lever Part	Nylon 6 (Various Color)	Nylon 6 (Various Color)
Thread Part	SUM22L Ferrosoferric Oxide Film (Black)	SUS303
Setscrew	Steel Ferrosoferric Oxide Film (Black)	Stainless Steel
Serration Ring (Insert)	Zinc Die Cast	Zinc Die Cast
Washer for Slotted Holes	SUS303	SUS303
Spring	Stainless Steel Wire	Stainless Steel Wire

Dimensions

Unit : mm

Part Number 1 (Thread Part: Made of Steel)	Part Number 1 (Thread Part: Made of Stainless Steel)	M (Coarse) Nominal of Thread	Pitch	R	H	H'	h	s	D	d	Dw	tw	Lw	s1	B*1	Tooth No.	Max. Load*2 (N)	Max. Clamping Force*2 (kN)	Mass(g)
LEM-5-LWP20	**LEMS-5-LWP20**	M5	0.8	45	35.5	39	24.5	4.2	13	10	20	2	2	4	5.5	18	42	2.7	34 - 38
LEM-6-LWP20	**LEMS-6-LWP20**	M6	1	45	35.5	39	24.5	4.2	13	10	20	2	2	5	6.6	18	70	3.8	34 - 40
LEM-8-LWP25	**LEMS-8-LWP25**	M8	1.25	63	46.3	50.3	31	6.5	17.5	13.5	25	3	2	6	9	24	120	7	55 - 70
LEM-10-LWP30	**LEMS-10-LWP30**	M10	1.5	78	55.4	59.4	36	8	21	16	30	3	2	7	11	26	200	11	114 - 158

*1 : Set the width of the slotted hole to match the washer projection B dimension.
*2 : For the definitions of maximum load and maximum clamping force, see "Using the Clamp Lever / Tension Lever."

- Part number specification

LEMS-5 - 20 - LWP20 - BK
(1) (2) (1) (3)

For 2 screw length Lm, select from the sizes marked with ● in the table.

LEM-LWP Thread part: Made of Steel **LEMS-LWP** Thread part: Made of Stainless Steel

Part Number	Lm (mm) 2								
	12	16	20	25	32	40	50	63	80
LEM-5-LWP20	●	●	●	●	●	●	●		
LEM-6-LWP20	●	●	●	●	●	●	●		
LEM-8-LWP25	●	●	●	●	●	●	●	●	
LEM-10-LWP30		●	●	●	●	●	●	●	●
LEMS-5-LWP20	●	●	●	●	●	●	●		
LEMS-6-LWP20	●	●	●	●	●	●	●		
LEMS-8-LWP25		●	●	●	●	●	●	●	
LEMS-10-LWP30			●	●	●	●	●	●	●

Cleanroom Wash & Packaging ➡ P.xxxx	Screw Combination ➡ P.xxxx	Screw Length Adjustment ➡ P.xxxx	Vibration Resistant ➡ P.xxxx	Laser Marking ➡ P.xxxx
Please feel free to contact us	Not Available	Available / Add'l charge	Not Available	Available / Add'l charge

NBK WEB ▶ https://www.nbk1560.com